4600 COLONIAL RESIDENTIAL SERIES SPECIFICATIONS

FIXTURES	SOCKET TYPE		OPTICAL SYSTEMS		BB BALLAST BOX
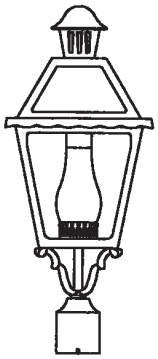 **4603**	**M** Single Medium Base Socket	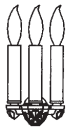 **3L** Three Light Cluster Candelabra Socket Assembly	**FHC** Frosted Hurricane Chimney	**RE3** **RE5** Refractor Type 3 and Type 5	**78BB -** Large Scale - for up to 150 watt **28BB -** Hanging or Pier for 150 watt ballasts **27BB -** Hanging or Pier for up to 100 watt ballasts

FIXTURES

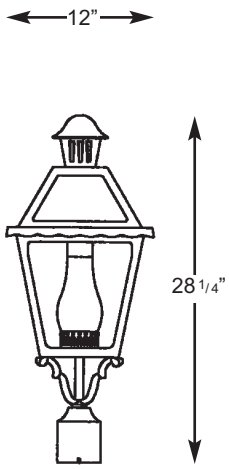

4603

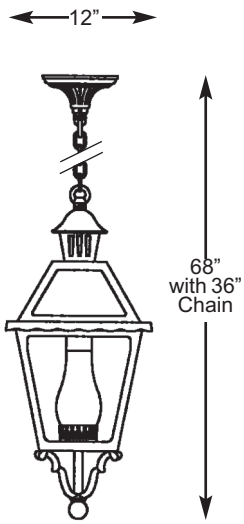

4612

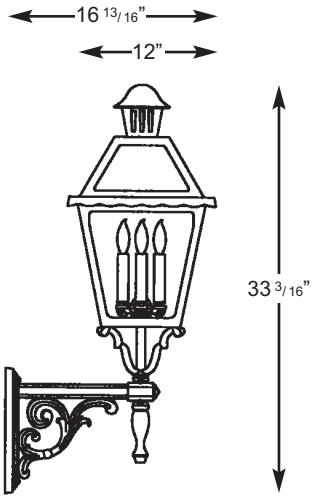

4620

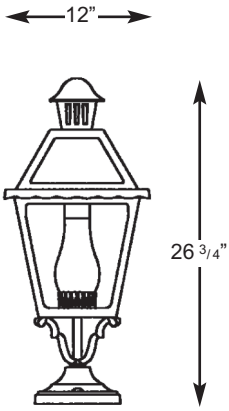

4635

NOTE: 4600 Series requires ballast box
Add 2’ to 4” on extensions for ballast box.
3 Lite cluster is 25 watt max lamp per socket.
4600 Series is standard with cupola on roor.
Add TF to the model for tall finial.
*Remote ballast box required if HID or CF.

555 Lawrence Ave. Roselle, IL 60172 • 847-588-3400 • Fax 847-588-3440
www.sternberglighting.com Email: info@sternberglighting.com

BUILDING A PART NUMBER

POST & ARM FIXTURES

ARM MOUNTED FIXTURE: NO. OF ARMS	ARM MOUNTED FIXTURE: FIXTURE / POSTARM	POST TOP FIXTURE (PT) FIXTURE	POST (See Post Section)	POST CAP	LIGHT SOURCE BALLAST WATTS / TYPE / VOLTS	OPTICS	OPTIONS	LENS	FINISH
2 —	4620/78PM /		3412FP5 /	FCC /	100HPS120 /	FC /	HPS100/MED /	CA /	BKT

WALL FIXTURES

FIXTURE / WALL BRACKET	LIGHT SOURCE BALLAST WATTS / TYPE / VOLTS	OPTICS	OPTIONS	LENS	FINISH
4620/78WBBB /	100HPS120 /	FC /	HPS100/MED /	CA /	BKT

PIER FIXTURES
Uses same information boxes as wall fixture

4635/FC

FIXTURE / PIER BASE

HANGING FIXTURES

DROP IN INCHES

FIXTURE / HANGING BRACKET	OVERALL DROP IN INCHES	LIGHT SOURCE BALLAST WATTS / TYPE / VOLTS	OPTICS	OPTIONS	LENS	FINISH
4612/CH27BB /	36 INCHES /	100HPS120 /	FC /	HPS100/MED /	CA /	BKT

PART NUMBER SELECTIONS

FIXTURES[1]
- 4603
- 4603CB
- 4612
- 4620
- 4620CB
- 4635
- 4635CB

OPTICS
- RE3
- RE5
- FHC
- MED
- 3L
- PL

LENSES
- BG
- CSA
- CTA
- CA
- WA

OPTIONS
- LAMPS Select from List
- BES - Brass Eagle Small
- BP - Brass Package

LAMPS[5]
- HPS35/MED
- HPS50/MED
- HPS70/MED
- HPS100/MED
- HPS150/MED
- MHP50/MED
- MHP70/MED
- MHP100/MED
- MHP150/MED
- PLT26
- PLT32
- PLT42
- PLT57

BALLASTS[1,4]
- 35HPS[2]
- 50HPS
- 70HPS
- 100HPS
- 150HPS
- 50MHP
- 70MHP
- 100MHP
- 150MHP
- 26PLT
- 32PLT
- 42PLT
- 57PLT
- INCAND (150 watt max.)

BB - BALLAST BOX
- 78BB - Large Scale for up to 150 watt ballasts
- 28BB - Hanging or Pier for up to 150 watt ballasts
- 27BB - Hanging or Pier for up to 100 watt ballasts

STANDARD FINISHES*
- BKT Black Textured
- WHT White Textured
- PGT Park Green Textured
- ABZT Architectural Medium Bronze Textured
- DBT Dark Bronze Textured

*Smooth Finishes are available upon request

CUSTOM FINISHES
- OI Old Iron
- RT Rust
- WBR Weathered Brown
- CD Cedar
- WBK Weathered Black
- TT Two Tone

STERNBERG SELECT FINISHES
- VG Verde Green
- SI Swedish Iron
- OWGT Old World Gray Textured

Notes:
[1] Pole mounted fixtures - requires ballast to be mounted in pole base.
[1] Wall mounted fixtures - requires wall bracket arms with ballast box.
[1] Pier mounted fixtures - require PB28BB or PB27BB if ballasted.
[1] Hanging fixtures - require CH/SH28BB or CH/SH27BB if ballasted.
[2] 35HPS is 120 volt only.
[3] Medium base socket only when used to house lamp.
[4] Medium base sockets standard with HID ballasts. 4-pin for PL.
[5] Metal halide systems are pulse start.

555 Lawrence Ave. Roselle, IL 60172 • 847-588-3400 • Fax 847-588-3440
www.sternberglighting.com Email: info@sternberglighting.com

4603 COLONIAL RESIDENTIAL SERIES

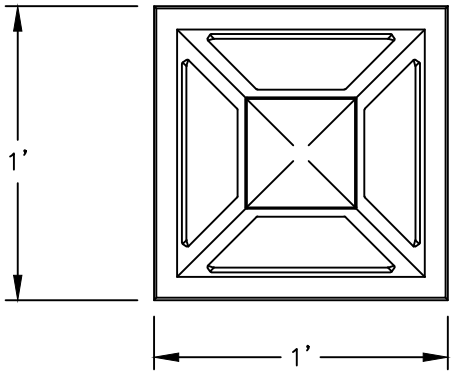

ALL ELECTRICAL COMPONENTS ARE U.L. OR E.T.L. LISTED IN USA AND CANADA.

FIXTURE WILL BE PREWIRED AND TESTED. MOUNTING HARDWARE IS SUPPLIED.

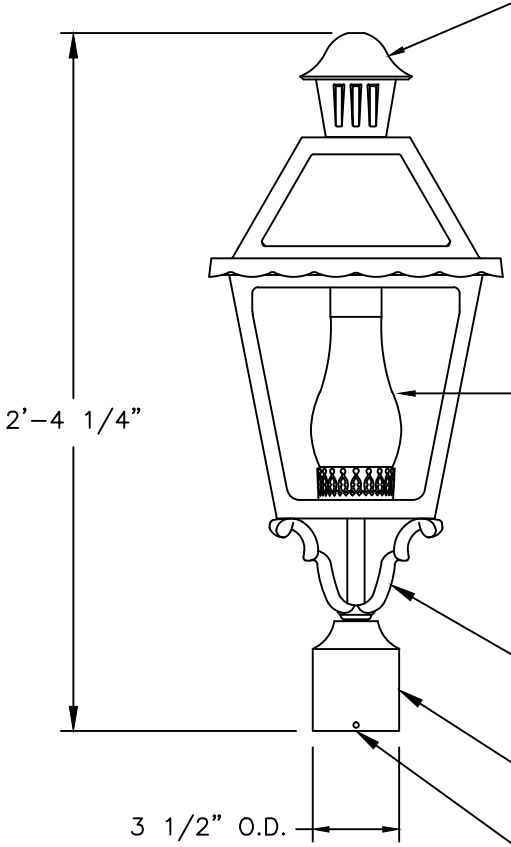

CAST ALUMINUM CUPOLA ALSO AVAILABLE WITH TALL FINIAL

(4) SIDED LENS AVAILABLE IN CLEAR SEEDED, CLEAR TEXTURED, CLEAR ACRYLIC, WHITE ACRYLIC OR BEVELED GLASS

DECORATIVE FROSTED CHIMNEY WITH MEDIUM BASE SOCKET OR DECORATIVE FROSTED CHIMNEY WITH FLUORESCENT SOCKET OR 3-LIGHT CLUSTER

OPEN BASE, ALSO AVAILABLE WITH CLOSED BASE

POST TOP STYLE

AVAILABLE IN WALL BRACKET, PIER BASE OR HANGING.

SLIPS 3" OD X 3" TALL TENON

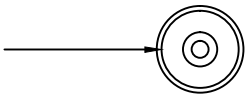

SECURED WITH SET SCREWS

STERNBERG SINCE 1923	3/16"=1'	DRAWN LMG DRAWN DATE APR 11 2011
	4603	DRAWING NUMBER

4612 COLONIAL RESIDENTIAL SERIES

ALL ELECTRICAL COMPONENTS ARE U.L. OR E.T.L. LISTED IN USA AND CANADA.

FIXTURE WILL BE PREWIRED AND TESTED. MOUNTING HARDWARE IS SUPPLIED.

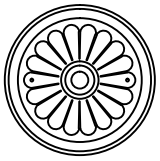

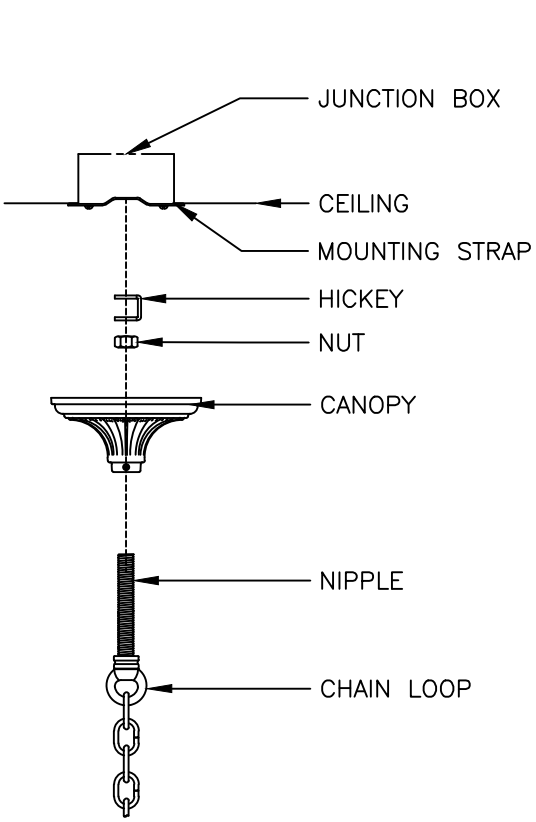

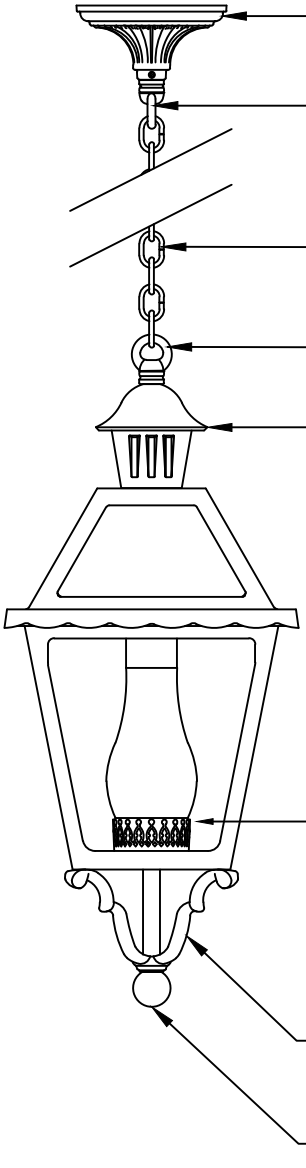

STERNBERG SINCE 1923	3/16"=1'	DRAWN LMG DRAWN DATE MAR 22 2011
	4612	DRAWING NUMBER

4620 COLONIAL RESIDENTIAL SERIES

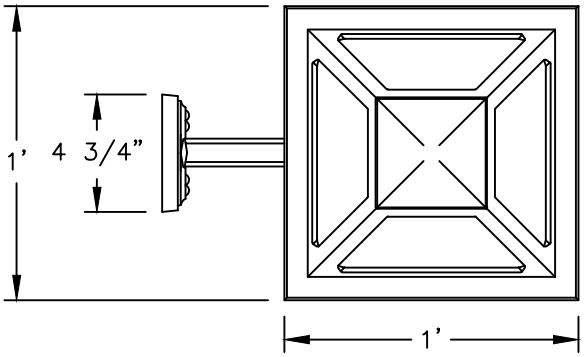

ALL ELECTRICAL COMPONENTS ARE U.L. OR E.T.L. LISTED IN USA AND CANADA.

FIXTURE WILL BE PREWIRED AND TESTED.

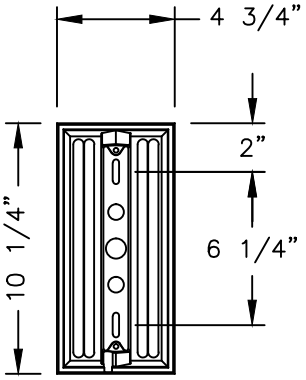

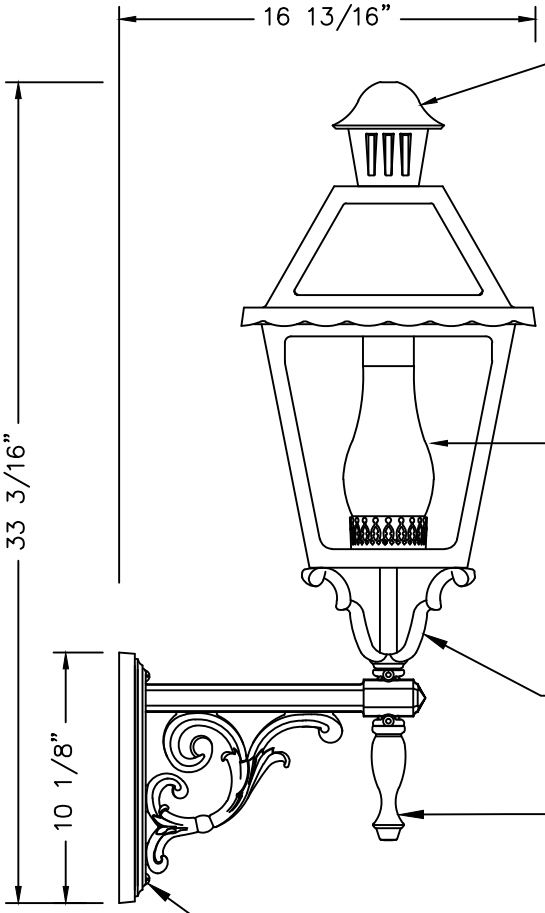

CAST ALUMINUM CUPOLA ALSO AVAILABLE WITH TALL FINIAL

(4) SIDED LENS AVAILABLE IN CLEAR SEEDED, CLEAR TEXTURED, CLEAR ACRYLIC, WHITE ACRYLIC OR BEVELED GLASS

DECORATIVE FROSTED CHIMNEY WITH MEDIUM BASE SOCKET OR DECORATIVE FROSTED CHIMNEY WITH FLUORESCENT SOCKET OR 3-LIGHT CLUSTER

OPEN BASE, ALSO AVAILABLE WITH CLOSED BASE

CAST ALUMINUM FONT ALSO AVAILABLE WITH LONG FONT OR BALL

(2) 1/4-20 X 1 1/8" RHMS

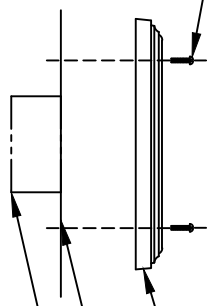

STERNBERG SINCE 1923	3/16"=1'	DRAWN LMG DRAWN DATE APR 11 2011
	4620	DRAWING NUMBER

4635 COLONIAL RESIDENTIAL SERIES

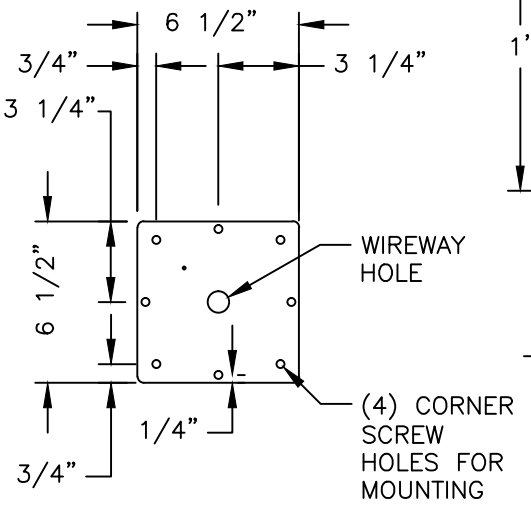

PLATE DETAIL

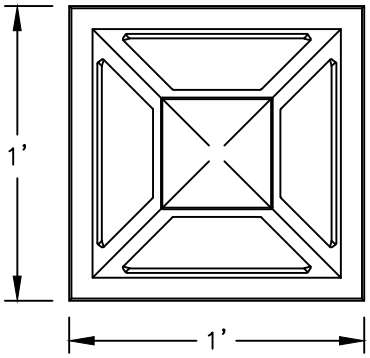

ALL ELECTRICAL COMPONENTS ARE U.L. OR E.T.L. LISTED IN USA AND CANADA.

FIXTURE WILL BE PREWIRED AND TESTED.

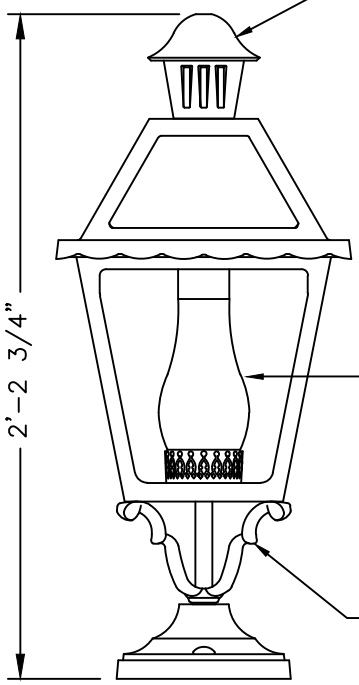

CAST ALUMINUM CUPOLA ALSO AVAILABLE WITH TALL FINIAL

(4) SIDED LENS AVAILABLE IN CLEAR SEEDED, CLEAR TEXTURED, CLEAR ACRYLIC, WHITE ACRYLIC OR BEVELED GLASS

DECORATIVE FROSTED CHIMNEY WITH MEDIUM BASE SOCKET OR DECORATIVE FROSTED CHIMNEY WITH FLUORESCENT SOCKET OR 3-LIGHT CLUSTER

OPEN BASE, ALSO AVALABLE WITH CLOSED BASE

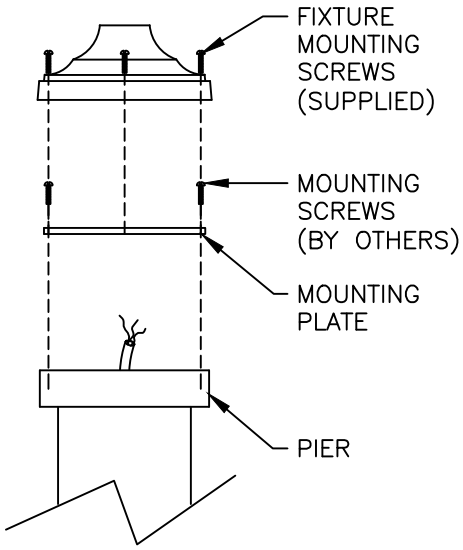

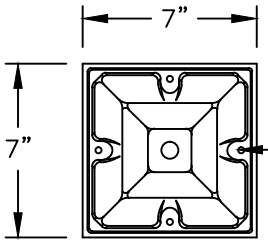

PIER BASE SECURED WITH (4) 5/16-18 X 3/4" RHMS

STERNBERG SINCE 1923	3/16"=1'	DRAWN LMG DRAWN DATE APR 22 2011
	4635	DRAWING NUMBER